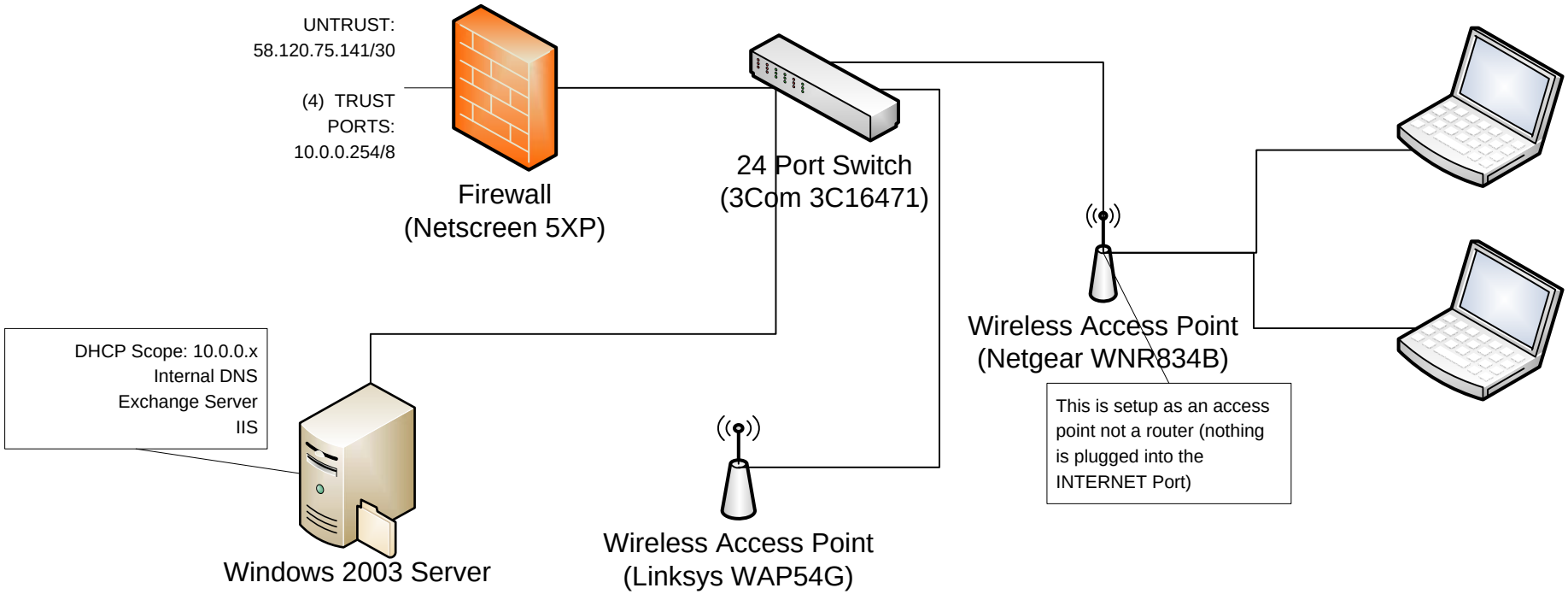
UNTRUST:
58.120.75.141/30
(4) TRUST
PORTS:
10.0.0.254/8
Firewall
(Netscreen 5XP)
24 Port Switch
(3Com 3C16471)
Wireless Access Point
(Netgear WNR834B)
This is setup as an access point not a router (nothing is plugged into the INTERNET Port)
DHCP Scope: 10.0.0.x
Internal DNS
Exchange Server
IIS
Windows 2003 Server
Wireless Access Point
(Linksys WAP54G)

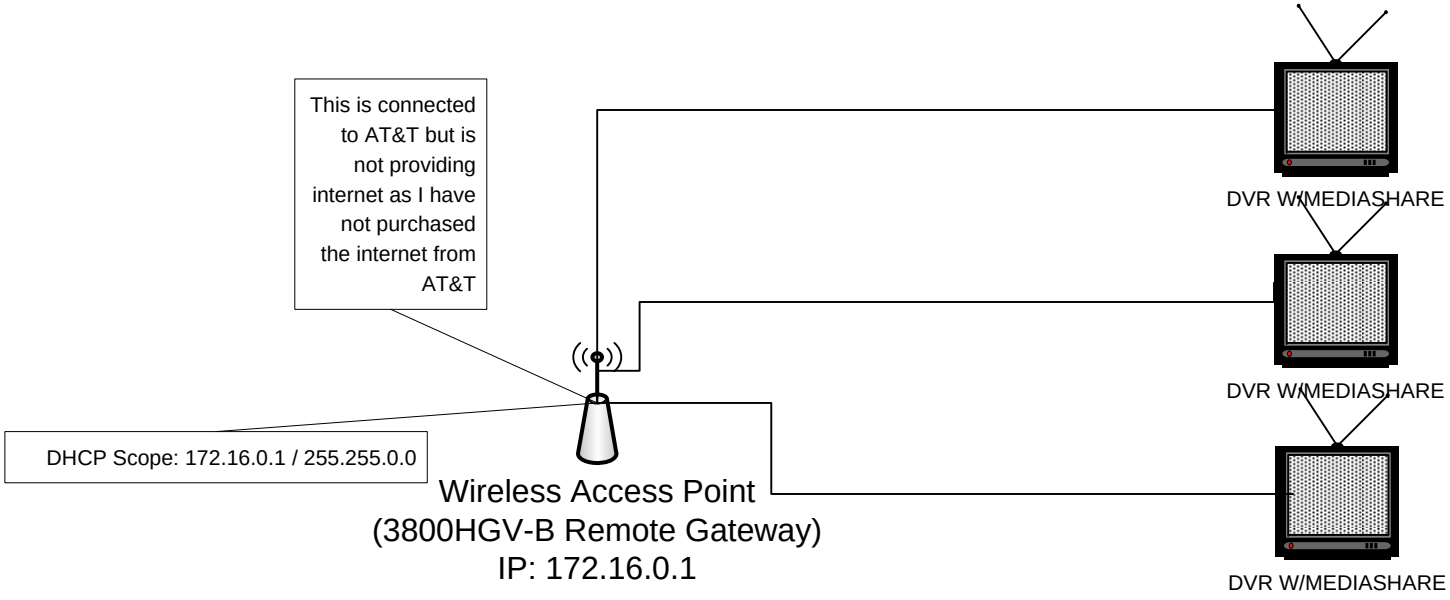
This is connected to AT&T but is not providing internet as I have not purchased the internet from AT&T
DHCP Scope: 172.16.0.1 / 255.255.0.0
Wireless Access Point
(3800HGV-B Remote Gateway)
IP: 172.16.0.1
DVR W/MEDIASHARE
DVR W/MEDIASHARE
DVR W/MEDIASHARE